TRACO POWER

AC/DC Medical Power Supply

TMW 24P Series, 24 Watt

- **Fully encapsulated, dust resistant, and waterproof (IP68 certified)**
- **Operating temperature range –20° to +80°C**
- **Mountable in wall outlet boxes**
- **Screw mountable on wood and inside furniture**
- **Safety approval IEC/EN 62368-1 and IEC/EN 60335-1**
- **2xMOPP certified according to IEC/EN 60601-1 3rd edition**
- **Leakage current < 100 µA for body-floating (BF) applications**
- **I/O isolation 4000 VAC (reinforced)**
- **Short-circuit protection (SCP), overvoltage protection (OVP) and overtemperature protection (OTP)**
- **5-year product warranty**

prepared

Scheme

ES 60601-1 IEC 60601-1
UL 62368-1 IEC 60335-1
IEC 62368-1

The TMW 24P is a series of fully encapsulated AC/DC power supplies designed for medical, household, and industrial applications. All models come in a compact, dust resistant, and waterproof IP68 housings, are IEC/EN 62368-1, IEC/-EN 60335-1 and IEC/EN 60601-1 3rd edition compliant and are certified for 2xMOPP. Featuring a reinforced isolation, the TMW 24P power supplies are prepared for protection class II applications. Their wide operating temperature range from -20°C to +80°C makes them ideal candidates for demanding applications.

Models

Order Code	Output Power max.	Output Voltage nom.	Output Current max.	Efficiency typ.
TMW 24-105P	20.4 W	5.1 VDC	4 A	85 %
TMW 24-112P	24 W	12 VDC	2 A	88 %
TMW 24-124P		24 VDC	1 A	90 %

Input Specifications

Input Voltage	Operational Range:	85 - 264 VAC (Full Range)
	Rated Range:	100 - 240 VAC (Full Range)
Input Frequency	Operational Range:	47 - 63 Hz
	Certified:	50/60 Hz
Power Consumption	- No load & Vin = 230 VAC	200 mW max. (Ready to meet ErP directive)
	- No load & Vin = 115 VAC	200 mW max.
Input Inrush Current	- At 230 VAC	50 A max.
	- At 115 VAC	25 A max.
Power Factor	- At 230 VAC	0.45 min.
	- At 115 VAC	0.55 min.
Input Protection		T 2 A (Internal Fuse)
Recommended Input Fuse		(The need of an external fuse has to be assessed in the final application.)

Output Specifications

Voltage Set Accuracy		±2% max.
Regulation	- Input Variation (Vmin - Vmax)	0.5% max.
	- Load Variation (10 - 90%)	1% max. (12 Vout and 24 Vout model) 2% max. (5 Vout model)
Ripple and Noise (20 MHz Bandwidth)		195 mVp-p max.
Capacitive Load		10'000 µF max.
Minimum Load		Not required
Temperature Coefficient		±2 %/K max.
Hold-up Time	- At 230 VAC	40 ms min.
	- At 115 VAC	7 ms min.
Start-up Time	- At 230 VAC	500 ms max.
	- At 115 VAC	500 ms max.
Start-up Overshoot Voltage		5% max.
Short Circuit Protection		Continuous, Automatic recovery
Output Current Limitation		105 - 150% of Iout max.
Overvoltage Protection		130% typ. of Vout nom. 120 - 160% of Vout nom.
Transient Response	- Response Deviation	5% max. (10% to 90% Load Step)
	- Response Time	2'000 µs max. (10% to 90% Load Step)

All specifications valid at nominal voltage, resistive full load and +25°C after warm-up time, unless otherwise stated.

Safety Specifications

Safety Standards	- IT / Multimedia Equipment	EN 62368-1 IEC 62368-1 UL 62368-1
	- Household	EN 60335-1 IEC 60335-1
	- Medical Equipment	EN 60601-1 IEC 60601-1 ANSI/AAMI ES 60601-1 CSA-C22.2, No 60601-1 2 x MOPP (Means Of Patient Protection)
	- LED Modules Controlgear	EN 61347-2-13
	- Luminaires for Furniture	VDE 0710-14
	- Power Transformers	EN 61558-1 IEC 61558-1 EN 61558-2-8 IEC 61558-2-8 EN 61558-2-16 IEC 61558-2-16
	- Certification Documents	www.tracopower.com/overview/tmw24p
Protection Class		Class I & II (Prepared): Reinforced Insulation
Pollution Degree		PD 2
Over Voltage Category		OVC II

EMC Specifications

EMI Emissions			EN 61000-6-3 (Generic Residential) EN 61204-3 (Low Voltage Power Supplies)
	- Conducted Emissions		EN 55011 class B (internal filter) EN 55032 class B (internal filter)
	- Radiated Emissions		EN 55011 class B (internal filter) EN 55032 class B (internal filter)
	- Harmonic Current Emissions		EN 61000-3-2, class A
EMS Immunity			EN 61000-6-2 (Generic Industrial) EN 60601-1-2 edition 4 (Medical Devices)
	- RF Electromagnetic Field		EN 61000-4-3, 10 V/m, perf. criteria A
	- EFT (Burst) / Surge		EN 61000-4-4, ±2 kV, perf. criteria A
		L to L:	EN 61000-4-5, ±1 kV, perf. criteria A
	- Conducted RF Disturbances		EN 61000-4-6, 10 Vrms, perf. criteria A
	- PF Magnetic Field	Continuous:	EN 61000-4-8, 30 A/m, perf. criteria A
	- Voltage Dips & Interruptions	230 VAC / 50 Hz:	EN 61000-4-11 20%, 250 periods, perf. criteria A 30%, 25 periods, perf. criteria A 60%, 10 periods, perf. criteria A >95%, 5 periods, perf. criteria B >95%, 250 periods, perf. criteria B
		115 VAC / 60 Hz:	EN 61000-4-11 20%, 250 periods, perf. criteria A 30%, 25 periods, perf. criteria B 60%, 10 periods, perf. criteria B >95%, 5 periods, perf. criteria B >95%, 250 periods, perf. criteria B

General Specifications

Relative Humidity		100% max.
Temperature Ranges	- Operating Temperature	−20°C to +80°C
	- Storage Temperature	−40°C to +90°C

All specifications valid at nominal voltage, resistive full load and +25°C after warm-up time, unless otherwise stated.

Power Derating	- High Temperature - Low Input Voltage	2 %/K above 50°C 2 %/V below 100 VAC
Over Temperature Protection Switch Off	- Protection Mode - Measurement Point	85°C min. / 90°C typ. / 95°C max. (Automatic recovery) Case
Cooling System		Natural convection (20 LFM)
Altitude During Operation		5'000 m max. (4'000 m max. for IEC 61558-2-8)
Switching Frequency		25 - 140 kHz (PWM QR)
Insulation System		Reinforced Insulation
Isolation Test Voltage	- Input to Output, 60 s - Input to Output, 1 s	4'000 VAC 4'000 VAC
Creepage	- Input to Output	8 mm min.
Clearance	- Input to Output	8 mm min.
Isolation Resistance	- Input to Output, 500 VDC	100 MΩ min.
Isolation Capacitance	- Input to Output, 100 kHz, 1 V	1'100 pF typ. / 1'300 pF max.
Leakage Current (at 240 VAC / 60 Hz)	- Touch Current	100 µA max.
Reliability	- Calculated MTBF	3'400'000 h (see application note) (IEC 61709)
Washing Process		Not allowed
Environment	- Vibration - Mechanical Shock	IEC 60068-2-6 3 g, 3 axis, sine sweep, 10-55 Hz, 1 oct/min IEC 60068-2-27 25 g, 3 axis, half sine, 11 ms
Case Ingress Protection		IP 68 (acc. IEC 60529)
Housing Material		Plastic (UL 94 V-1 rated)
Potting Material		Polyurethane (UL 94 V-2 rated)
Pin Material		Brass (Alloy 360/385)
Pin Surface Plating		Tin (200 - 300 µm), matte
Housing Type		Plastic Case
Mounting Type		PCB Mount
Connection Type		THD (Through-Hole Device)
Weight	- single output	5.1 VDC model: 112 g 12 VDC model: 114 g 24 VDC model: 114 g
Power Back Immunity		5.1 VDC model: 6.4 V max. 12 VDC model: 15 V max. 24 VDC model: 30 V max.
Environmental Compliance	- REACH Declaration - RoHS Declaration	www.tracopower.com/info/reach-declaration.pdf REACH SVHC list compliant REACH Annex XVII compliant www.tracopower.com/info/rohs-declaration.pdf Exemptions: 7a, 7c-I (RoHS exemptions refer to the component concentration only, not to the overall concentration in the product (O5A rule). The SCIP number is provided on request.)

Supporting Documents

Overview Link (for additional Documents)	www.tracopower.com/overview/tmw24p

All specifications valid at nominal voltage, resistive full load and +25°C after warm-up time, unless otherwise stated.

Outline Dimensions

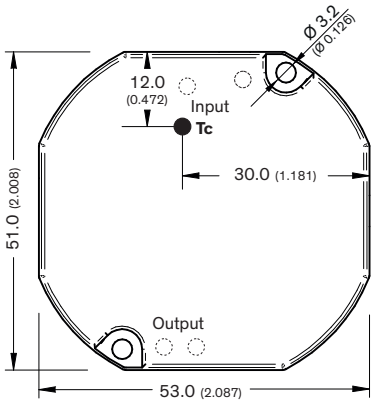

TOP VIEW

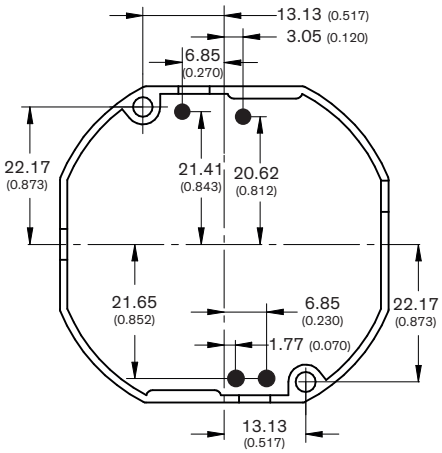

BOTTOM VIEW

Pinout	
Pin	**Function**
1	AC (N)
2	AC (L)
3	– Vout
4	+ Vout

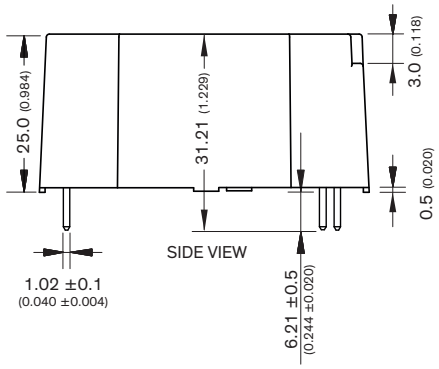

SIDE VIEW

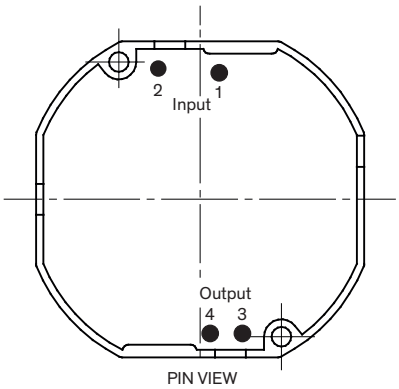

PIN VIEW

All dimensions in mm (inch)
Tolerances ±0.2 (±0.008)
unless stated otherwise

© Copyright 2022 Traco Electronic AG