Heat Sink

TEP-HS4

Order Code	TEP-HS4
Compatible with	TEP 100UIR, TEP 40UIR, TEP 60UIR
Thermal Impedance	Please refer to converter datasheets
Package Content	Heatsink, thermal pad and mounting screws
Material	AL 6063
Surface Finish	Anodized (black)
Weight	20 g (without converter)
RoHS Exemptions	No Exemptions

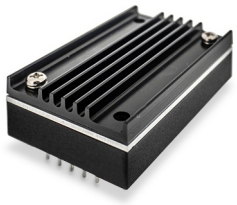

Outline Dimensions

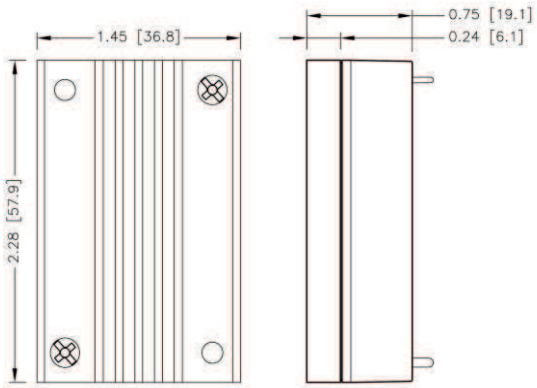

Dimensions in inch, [ ] = mm

© Copyright 2022 Traco Electronic AG