TRACO POWER

DC/DC Railway Converter

TEP 60UIR Series, 60 Watt

- **Ultra-wide 12:1 input voltage range 9–75, 14–160 VDC**
- **Compact 2.3”x1.45”x0.5” standard package (quarter brick)**
- **Bus pin to easily extend hold-up time**
- **EN 50155 and EN 61373 approval for railway applications**
- **Qualification for fire behavior according to EN 45545-2**
- **Operating temperature range −40°C to +85°C**
- **I/O-isolation 3‘000 VAC**
- **High efficiency up to 91%**
- **Adjustable output voltage, Remote On/Off and adjustable under voltage lockout**
- **3-year product warranty**

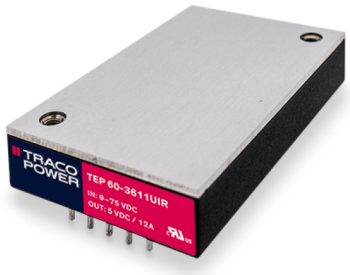

UL 62368-1 IEC 62368-1

The TEP 60UIR is a series of high performance 60 Watt railway DC/DC converters with ultra wide 12:1 input voltage range featuring a compact ¼ brick (2.3”x1.45”x0.5”) metal package. The ultra wide input allows the converter to act as an all-in-one solution if different voltage ranges have to be covered in the same application, resolving the issue of having multiple different converters installed. An internal circuit implemented in these modules helps to extend the hold-up time with ease as it eliminates the need of expensive high voltage capacitors to cover the full input range. With only a 25V capacitor (independent of the input voltage) the whole input range can be covered effectively reducing cost, size and inrush current. All models are approved for railway applications according to EN 50155, EN 61373, EN 45545-2 and offer standard features such as high efficiency up to 91%, an operating temperature range of -40° to +85°C and an I/O-isolation voltage of 3’000 VAC. An adjustable under voltage lockout function, remote on/off and adjustable outputs round out the features and ensure that these converter modules fit in any application setup.

Models

Order Code	Input Voltage Range	Output Voltage nom. (adjustable)	Output Current max.	Efficiency typ.
TEP 60-3611UIR	9 - 75 VDC (36 VDC nom.)	5 VDC (4.0 - 5.5 VDC)	12'000 mA	89 %
TEP 60-3612UIR		12 VDC (9.6 - 13.2 VDC)	5'000 mA	89 %
TEP 60-3613UIR		15 VDC (12.0 - 16.5 VDC)	4'000 mA	90 %
TEP 60-3615UIR		24 VDC (19.2 - 26.4 VDC)	2'500 mA	90 %
TEP 60-3618UIR		48 VDC (38.4 - 52.8 VDC)	1'250 mA	91 %
TEP 60-7211UIR	14 - 160 VDC (72 VDC nom.)	5 VDC (4.0 - 5.5 VDC)	12'000 mA	89 %
TEP 60-7212UIR		12 VDC (9.6 - 13.2 VDC)	5'000 mA	89 %
TEP 60-7213UIR		15 VDC (12.0 - 16.5 VDC)	4'000 mA	89 %
TEP 60-7215UIR		24 VDC (19.2 - 26.4 VDC)	2'500 mA	90 %
TEP 60-7218UIR		48 VDC (38.4 - 52.8 VDC)	1'250 mA	90 %

Options

TEP-HS2	- Optional Heat Sink: www.tracopower.com/overview/tep-hs2
TEP-HS4	- Optional Heat Sink: www.tracopower.com/overview/tep-hs4
on demand (backorder with MOQ non stocking item)	- Optional Heat Sink with large profile: www.tracopower.com/overview/tep-hs3 - Optional Heat Sink with large profile: www.tracopower.com/overview/tep-hs5 - Optional model with 28 VDC and 2'150 mA Output, and 9 - 75 VDC Input - Optional model with 53 VDC and 1'140 mA Output, and 9 - 75 VDC Input - Optional model with 28 VDC and 2'150 mA Output, and 14 - 160 VDC Input - Optional model with 53 VDC and 1'140 mA Output, and 14 - 160 VDC Input - Optional models with inverse Remote On/Off function (passive = off)

Input Specifications

Input Current	- At no load	36 Vin models:	20 mA typ.
		72 Vin models:	17 mA typ.
Surge Voltage		36 Vin models:	100 VDC max. (1 s max.)
		72 Vin models:	185 VDC max. (1 s max.)
Under Voltage Lockout		36 Vin models:	7.3 VDC min. / 7.7 VDC typ. / 8.1 VDC max.
		72 Vin models:	10 VDC min. / 11 VDC typ. / 12 VDC max.
			(The Start-up voltage as well as the Shutdown voltage can be adjusted by a resistor between UVLO and -Vin pins. See application note: www.tracopower.com/overview/tep60uir)
Recommended Input Fuse		36 Vin models:	12'000 mA (fast acting)
		72 Vin models:	8'000 mA (fast acting)
			(The need of an external fuse has to be assessed in the final application.)
Input Filter			Internal Pi-Type

Output Specifications

Output Voltage Adjustment			−20% to +10% (By external trim resistor)
		See application note:	www.tracopower.com/overview/tep60uir
			Output power must not exceed rated power!
Voltage Set Accuracy			±1% max.
Regulation	- Input Variation (Vmin - Vmax)		0.1% max.
	- Load Variation (0 - 100%)		0.1% max.
Ripple and Noise		5 Vout models:	75 mVp-p typ. (w/ 1 µF X7R ‖ 22 µF poscap)
(20 MHz Bandwidth)		12 Vout models:	100 mVp-p typ. (w/ 22 µF X7R)
		15 Vout models:	100 mVp-p typ. (w/ 22 µF X7R)
		24 Vout models:	200 mVp-p typ. (w/ 4.7 µF X7R)
		28 Vout models:	200 mVp-p typ. (w/ 4.7 µF X7R)
		48 Vout models:	300 mVp-p typ. (w/ 2.2 µF X7R)
		53 Vout models:	300 mVp-p typ. (w/ 2.2 µF X7R)
Capacitive Load		5 Vout models:	24'000 µF max.
		12 Vout models:	4'200 µF max.
		15 Vout models:	2'700 µF max.
		24 Vout models:	1'100 µF max.
		28 Vout models:	780 µF max.
		48 Vout models:	260 µF max.
		53 Vout models:	220 µF max.
Minimum Load			Not required
Temperature Coefficient			±0.02 %/K max.
Hold-up Time			10 ms min. (acc. to EN 50155 Class S2, see application note for BUS connection: www.tracopower.com/overview/tep60uir)

All specifications valid at nominal voltage, resistive full load and +25°C after warm-up time, unless otherwise stated.

Start-up Time		75 ms typ. / 100 ms max.
Short Circuit Protection		Continuous, Automatic recovery
Output Current Limitation		120 - 140% of Iout max.
Overvoltage Protection		120 - 135% of Vout nom.
Transient Response	- Response Time	250 µs typ. (25% Load Step)

Safety Specifications

Standards	- IT / Multimedia Equipment	EN 62368-1 IEC 62368-1 UL 62368-1
	- Railway Applications	EN 50155
	- Certification Documents	www.tracopower.com/overview/tep60uir
Pollution Degree		PD 2
Over Voltage Category		OVC II

EMC Specifications

EMI (Emissions)		EN 50121-3-2 (EMC for Rolling Stock)
	- Conducted Emissions	EN 55032 class A (with external filter) EN 55032 class B (with external filter)
	- Radiated Emissions	EN 55032 class A (with external filter) EN 55032 class B (with external filter)
	External filter proposal:	www.tracopower.com/overview/tep60uir
EMS (Immunity)		EN 50121-3-2 (EMC for Rolling Stock) EN 55024 (IT Equipment) EN 55035 (Multimedia)
	- Electrostatic Discharge	Air: EN 61000-4-2, ±8 kV, perf. criteria B Contact: EN 61000-4-2, ±6 kV, perf. criteria B
	- RF Electromagnetic Field	EN 61000-4-3, 20 V/m, perf. criteria A
	- EFT (Burst) / Surge	EN 61000-4-4, ±2 kV, perf. criteria A EN 61000-4-5, ±2 kV, perf. criteria B
	Ext. input component:	36 Vin models: 2 x KY 220 µF / 100 V 72 Vin models: 2 x KXJ 150 µF / 200 V
	- Conducted RF Disturbances	EN 61000-4-6, 10 Vrms, perf. criteria A
	- PF Magnetic Field	Continuous: EN 61000-4-8, 100 A/m, perf. criteria A 1 s: EN 61000-4-8, 1000 A/m, perf. criteria A
EMC / Environmental	- Certification Documents	www.tracopower.com/overview/tep60uir

General Specifications

Relative Humidity		95% max. (non condensing)
Temperature Ranges	- Operating Temperature	–40°C to +85°C
	- Case Temperature	+105°C max.
	- Storage Temperature	–55°C to +125°C
Power Derating	- High Temperature	Depending on model
	See application note:	www.tracopower.com/overview/tep60uir
Over Temperature Protection Switch Off	- Protection Mode	110°C typ. (Automatic recovery at 95°C typ.)
Cooling System		Natural convection (20 LFM)
Sense Function		10% max. of Vout nom. (If sense function is not used, sense pins must be connected to corresponding polarity output pins.)

All specifications valid at nominal voltage, resistive full load and +25°C after warm-up time, unless otherwise stated.

Remote Control	- Voltage Controlled Remote (passive = on) - Off Idle Input Current - Remote Pin Input Current	On: 3.0 to 12 VDC or open circuit Off: 0 to 1.2 VDC or short circuit Refers to 'Remote' and '-Vin' Pin 3 mA typ. -0.5 to 1.0 mA (Optional models with inverse Remote On/Off function (passive = off))
Altitude During Operation		5'000 m max.
Switching Frequency		160 - 200 kHz (PWM) 180 kHz typ. (PWM)
Insulation System		Reinforced Insulation (72 Vin models) Basic Insulation (36 Vin models)
Working Voltage (rated)		220 VAC
Isolation Test Voltage	- Input to Output, 60 s - Input to Case, 60 s - Output to Case, 60 s	3'000 VAC (72 Vin models) 2'250 VDC (36 Vin models) 1'500 VAC (72 Vin models) 1'600 VDC (36 Vin models) 1'500 VAC (72 Vin models) 1'600 VDC (36 Vin models)
Isolation Resistance	- Input to Output, 500 VDC	1'000 MΩ min.
Isolation Capacitance	- Input to Output, 100 kHz, 1 V	1'000 pF max.
Reliability	- Calculated MTBF	738'000 h (MIL-HDBK-217F, ground benign)
Washing Process		According to Cleaning Guideline www.tracopower.com/info/cleaning.pdf
Environment	- Vibration - Mechanical Shock - Thermal Shock - Flammability	MIL-STD-810F EN 61373 EN 61373 MIL-STD-810F EN 45545-2 www.tracopower.com/info/en45545-declaration.pdf
Housing Material		Alu base-plate w. plastic case
Potting Material		Silicone (UL 94 V-0 rated)
Pin Material		Copper
Pin Foundation Plating		Nickel (2 - 3 µm)
Pin Surface Plating		Tin (3 - 5 µm), matte
Housing Type		Plastic Case
Mounting Type		PCB Mount
Connection Type		THD (Through-Hole Device)
Footprint Type		Quarter-Brick
Soldering Profile		Lead-Free Wave Soldering 260°C / 6 s max.
Weight		64 g
Thermal Impedance	- Case to Ambient	8.3 K/W typ. (without heatsink) 7.4 K/W typ. (with heatsink TEP-HS2) 7.4 K/W typ. (with heatsink TEP-HS4) 6.2 K/W typ. (with heatsink TEP-HS3) 6.2 K/W typ. (with heatsink TEP-HS5)
Environmental Compliance	- REACH Declaration - RoHS Declaration - SCIP Reference Number	www.tracopower.com/info/reach-declaration.pdf REACH SVHC list compliant REACH Annex XVII compliant www.tracopower.com/info/rohs-declaration.pdf Exemptions: 7(a), 7(c)-I (RoHS exemptions refer to the component concentration only, not to the overall concentration in the product (O5A rule).) 83f33b01-a468-4326-85f7-d2f7813d4e6d

All specifications valid at nominal voltage, resistive full load and +25°C after warm-up time, unless otherwise stated.

Additional Information

Supporting Documents	www.tracopower.com/overview/tep60uir
Frequently Asked Questions	www.tracopower.com/glossary-faq
Glossary	www.tracopower.com/info/glossary.pdf

Outline Dimensions

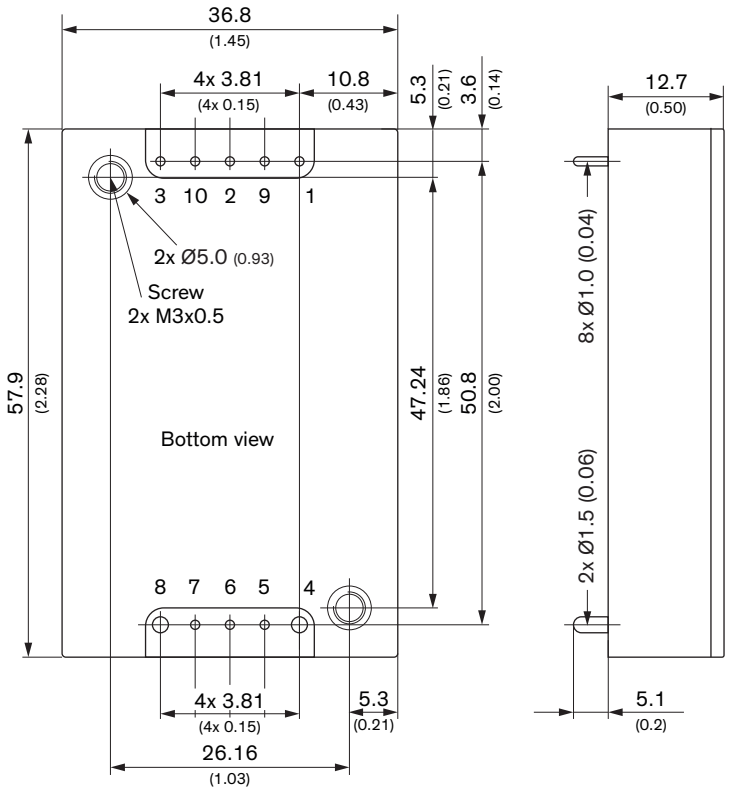

Dimensions in mm (inch)
Tolerances: x.x ±0.5 (±0.02)
x.xx ±0.25 (±0.01)
Pin diameter tolerances: ±0.1 (±0.004)
Screw lock torque: Max. 0.34 N·m (3.5 kgf·cm)

Pinout

Pin	Function
1	–Vin (GND)
2	Remote On/Off
3	+Vin (Vcc)
4	–Vout
5	–Sense
6	Trim
7	+Sense
8	+Vout
9	Bus
10	UVLO

© Copyright 2025 Traco Electronic AG
Specifications can be changed without notice.